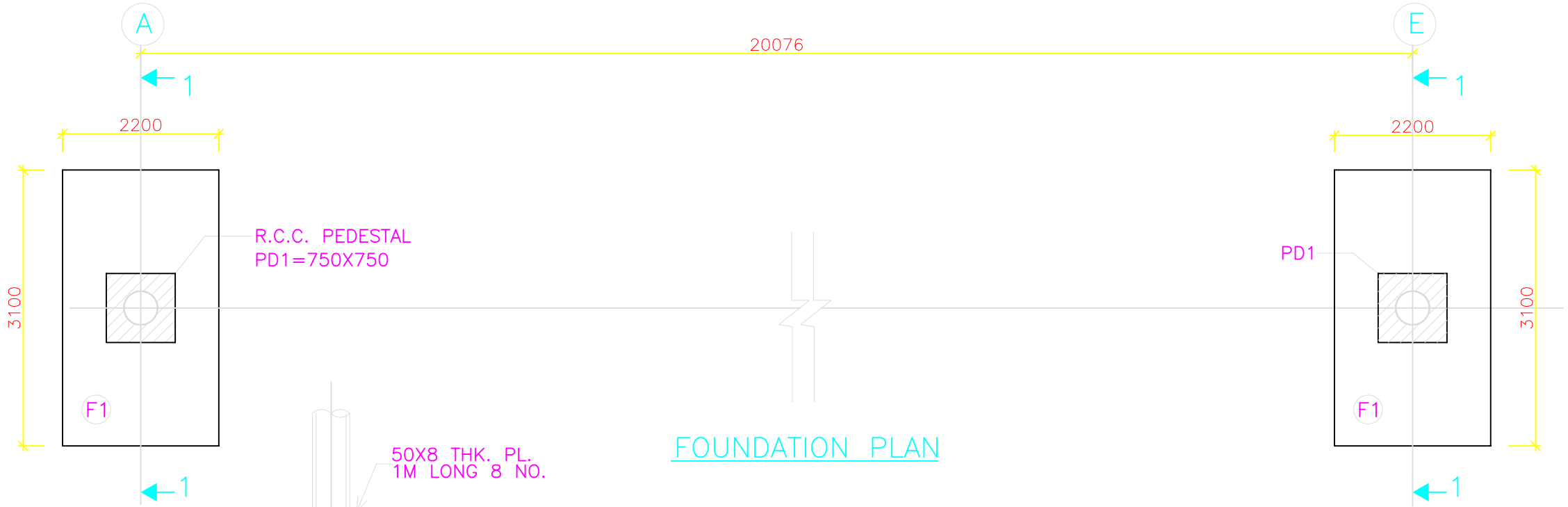

FOUNDATION PLAN

NOTES:-

1. ALL DIMENSIONS ARE IN MM.
2. DO NOT SCALE, FOLLOW WRITTEN DIMENSIONS ONLY.
3. CONCRETE MIX FOR ALL R.C.C. WORK=M20
4. CLEAR COVER FOR R.C.C. PEDESTALS=40 MM
5. CLEAR COVER FOR R.C.C. FOOTINGS=50 MM
6. ALL STRUCTURAL STEEL SHALL CONFORM TO IS:2062,FABRICATION & ERECTION SHALL CONFORM TO IS:800
7. ALL WELDS ARE 6MM FILLET WELDS UNLESS MENTIONED OTHERWISE.
8. WELDING SHALL BE CARRIED OUT IN ACCORDANCE WITH IS:816 & IS:823.
9. ALL REINFORCEMENT SHALL BE TOR STEEL CONFORMING TO I.S. 1786-1968 .
10. S.B.C. ASSUMED AS 12.5 t/m^2 AT A DEPTH OF 2.3 M FROM N.G.L. FOR THE PURPOSE OF FOUNDATION DESIGN.

REFERENCE DRAWINGS:-

2006069/RH/STD-019 - SPACE FRAME DETAILS
2006069/RH/STD-018 - MISC. CONNECTION DETAILS.

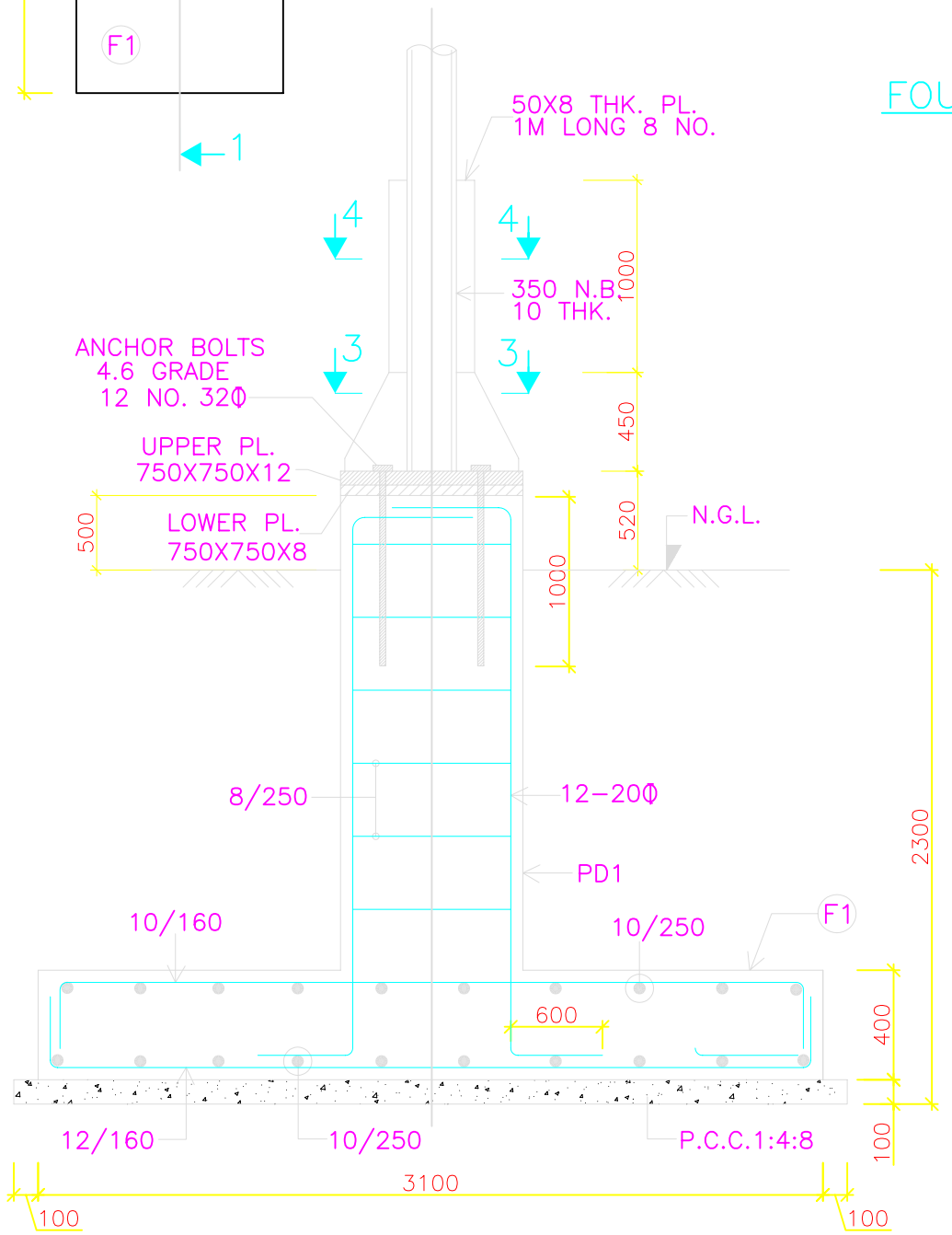

SECTION 1-1
(REFER FOUNDATION PLAN)

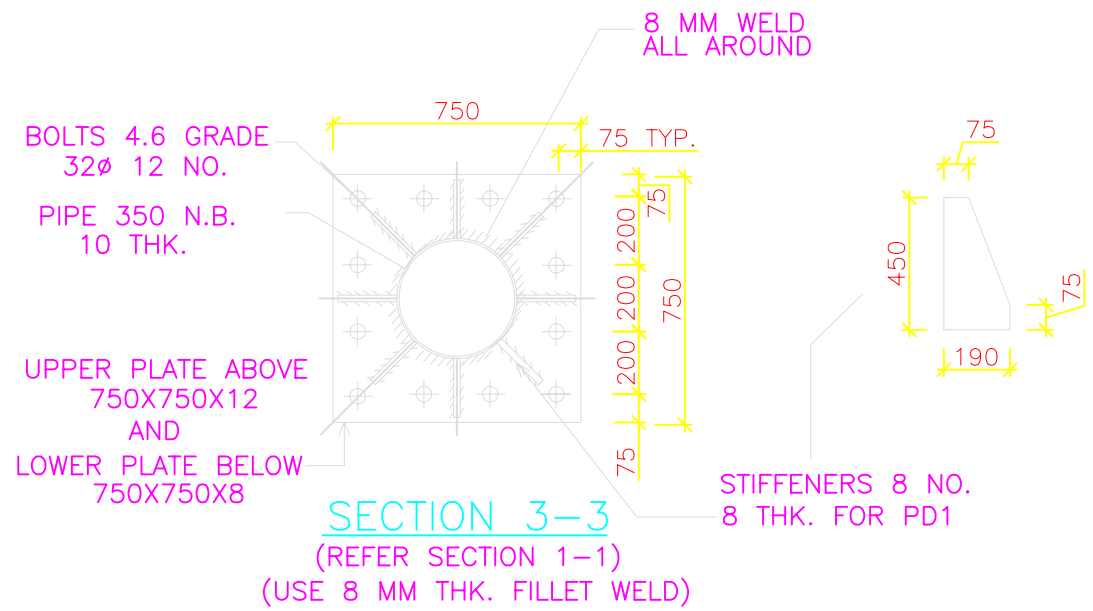

SECTION 3-3
(REFER SECTION 1-1)
(USE 8 MM THK. FILLET WELD)

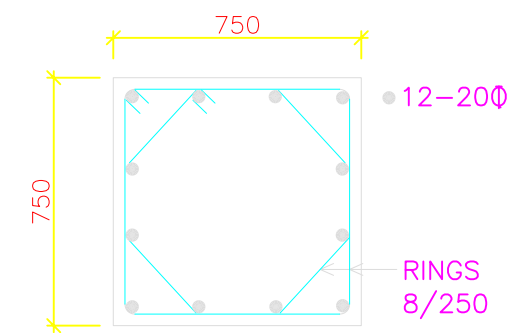

SCETION 2-2
R.C.C. PEDESTAL PD1
(750X750)

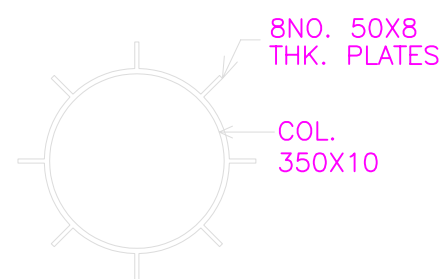

SECTION 4-4
(REFER SECTION 1-1)

REV.	DATE	DESCRIPTION OF REVISIONS	INITIALS

NOTICE:
THIS DRAWING HAS NOT BEEN PUBLISHED AND IS THE SOLE PROPERTY OF CONSULTING ENGINEERING SERVICES (I) PVT. LTD. AND IS ISSUED TO THE PARTY FOR THE SPECIFIC PURPOSE AS STATED IN THE AGREEMENT AND IT SHALL NOT BE REPRODUCED, COPIED, LENT OR OTHERWISE DISPOSED OF DIRECTLY OR INDIRECTLY, NOR USED FOR ANY OTHER PURPOSE OTHER THAN FOR WHICH IT IS FURNISHED.

CONSULTANT TO ITNL
CONSULTING ENGINEERING SERVICES (I) PVT. LTD
MUMBAI NEW DELHI KOLKATA

EMPLOYER
NANDED WAGHALA CITY MUNCIPAL CORPORATION

PROJECT
DPR FOR DEVELOPMENT OF NANDED CITY ROADS UNDER JNNURM

12M SPAN GANTRY FOUNDATION DETAILS

SCALE	HORZ. - N.T.S. / VERT. - N.T.S.	PURPOSE: FOR TENDER	STATUS: FOR APPROVAL	DRAWING NO.	DATE	REVISION
				2006069/RH/STD-017	13-06-2006	R0
				DRAWN: PRATIBHA	DESIGN: ASHISH	CHECKED: G.H.REDDY	APPROVED: DR. C.S.S.