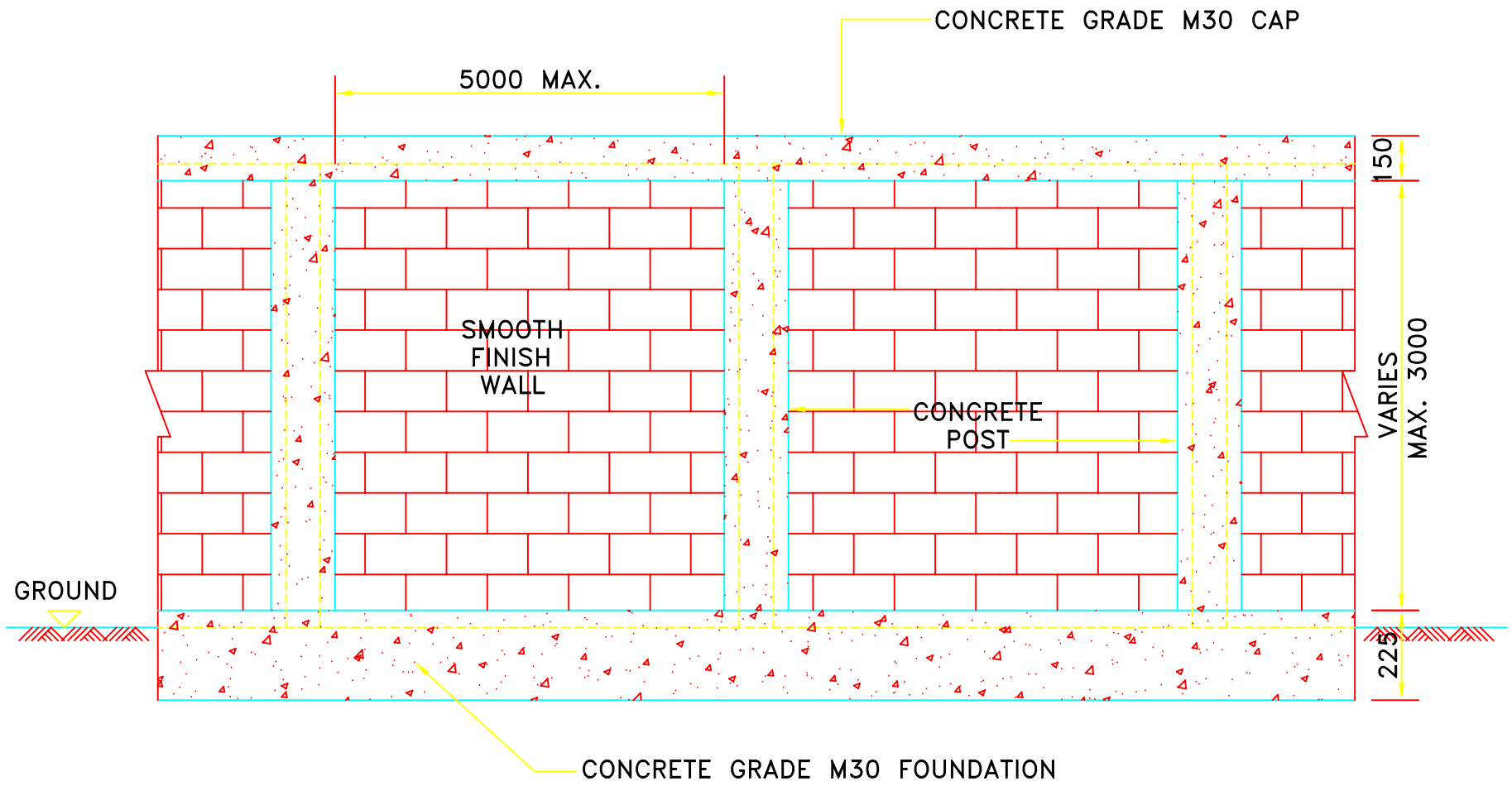

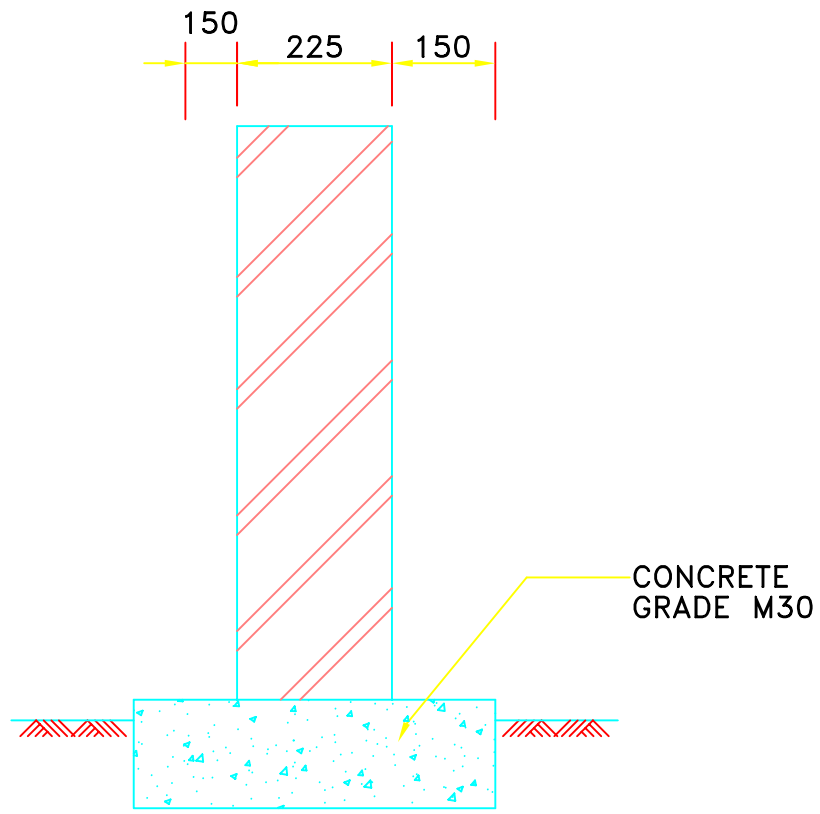

BLOCK WALL

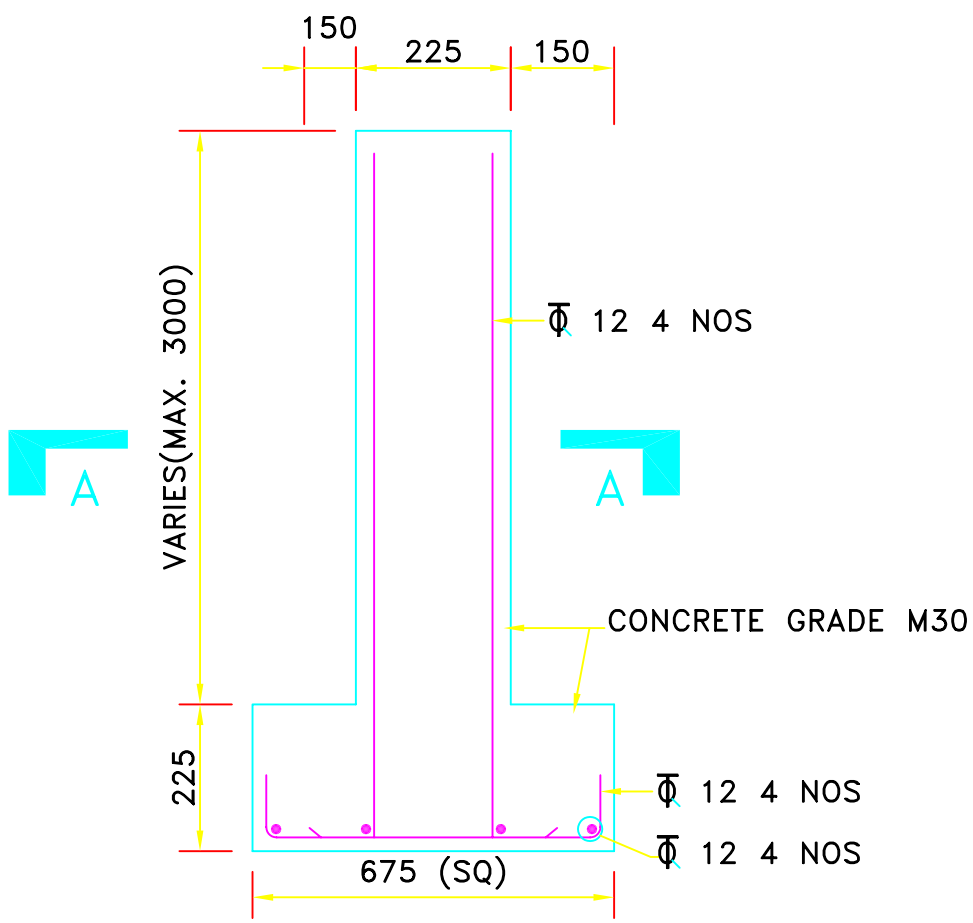

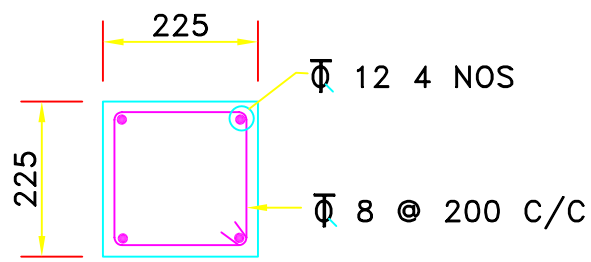

SECTION A–A

NOTES

1. ALL DIMENSIONS ARE IN MILLIMETRES
2. ALL REINFORCEMENT STEEL TO BE EPOXY COATED

REV.	DATE	DESCRIPTION OF REVISIONS	INITIALS

NOTICE:
THIS DRAWING HAS NOT BEEN PUBLISHED AND IS THE SOLE PROPERTY OF CONSULTING ENGINEERING SERVICES (I) PVT. LTD. AND IS ISSUED TO THE PARTY FOR THE SPECIFIC PURPOSE AS STATED IN THE AGREEMENT AND IT SHALL NOT BE REPRODUCED, COPIED, LENT OR OTHERWISE DISPOSED OF DIRECTLY OR INDIRECTLY, NOR USED FOR ANY OTHER PURPOSE OTHER THAN FOR WHICH IT IS FURNISHED.

CONSULTANT TO ITNL
CONSULTING ENGINEERING SERVICES (I) PVT. LTD
MUMBAI NEW DELHI KOLKATA

EMPLOYER
NANDED WAGHALA CITY MUNCIPAL CORPORATION

PROJECT
DPR FOR DEVELOPMENT OF NANDED CITY ROADS UNDER JNNURM

TYPICAL CONCRETE BLOCK WALL

SCALE: HORZ. - N.T.S. VERT. - N.T.S.

PURPOSE	DRAWING NO.	DATE	REVISION
FOR TENDER	2006069/RH/STD-010	13-06-2006	R0
STATUS	DRAWN	DESIGN	CHECKED	APPROVED
FOR APPROVAL	PRATIBHA	ASHISH	G.H.REDDY	DR. C.S.S.