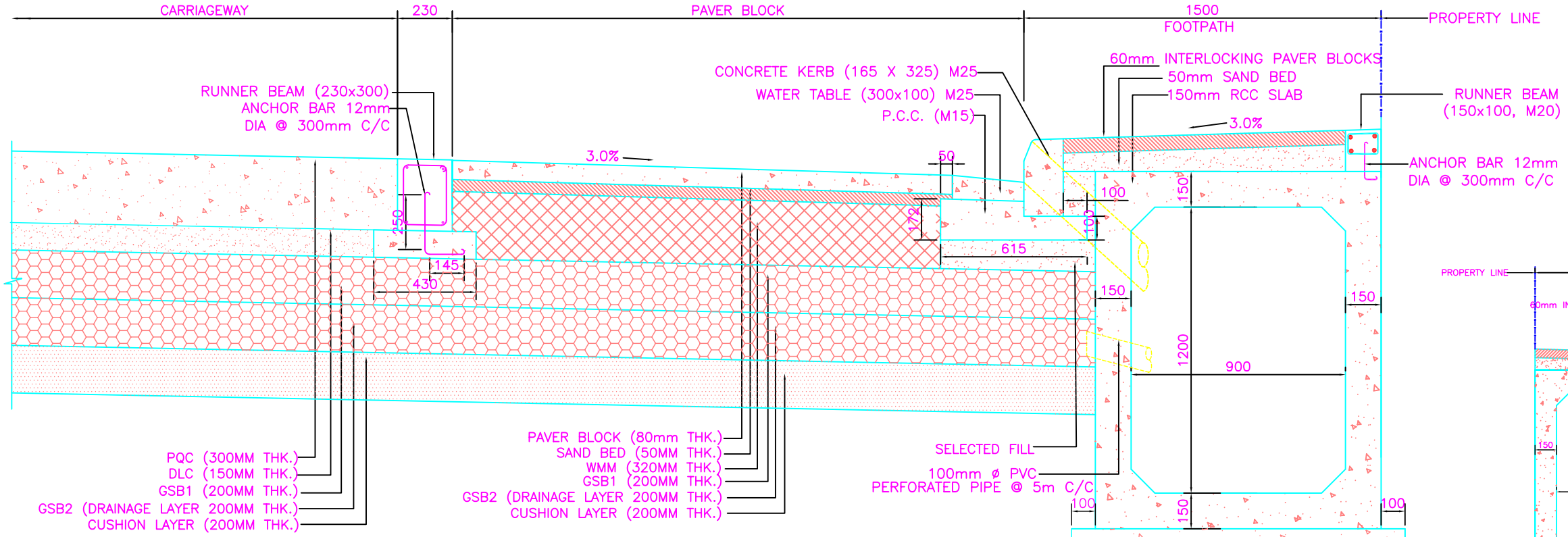

DETAIL AT 'B'
TYPICAL DETAIL OF FOOTPATH & DRAIN
(SCALE 1:15)

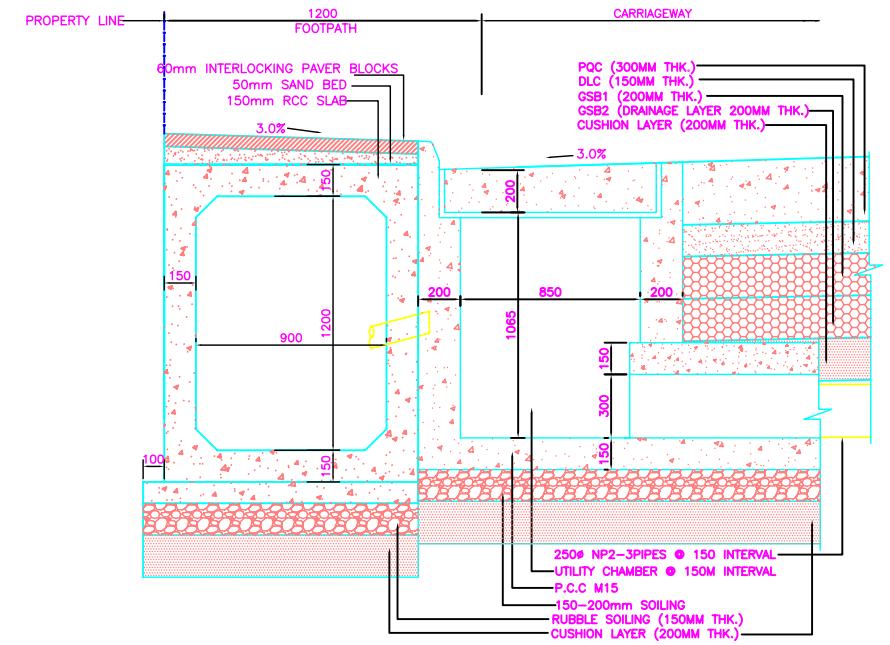

DETAIL AT 'C'
TYPICAL DETAIL OF UTILITY CHAMBER
(SCALE 1:20)

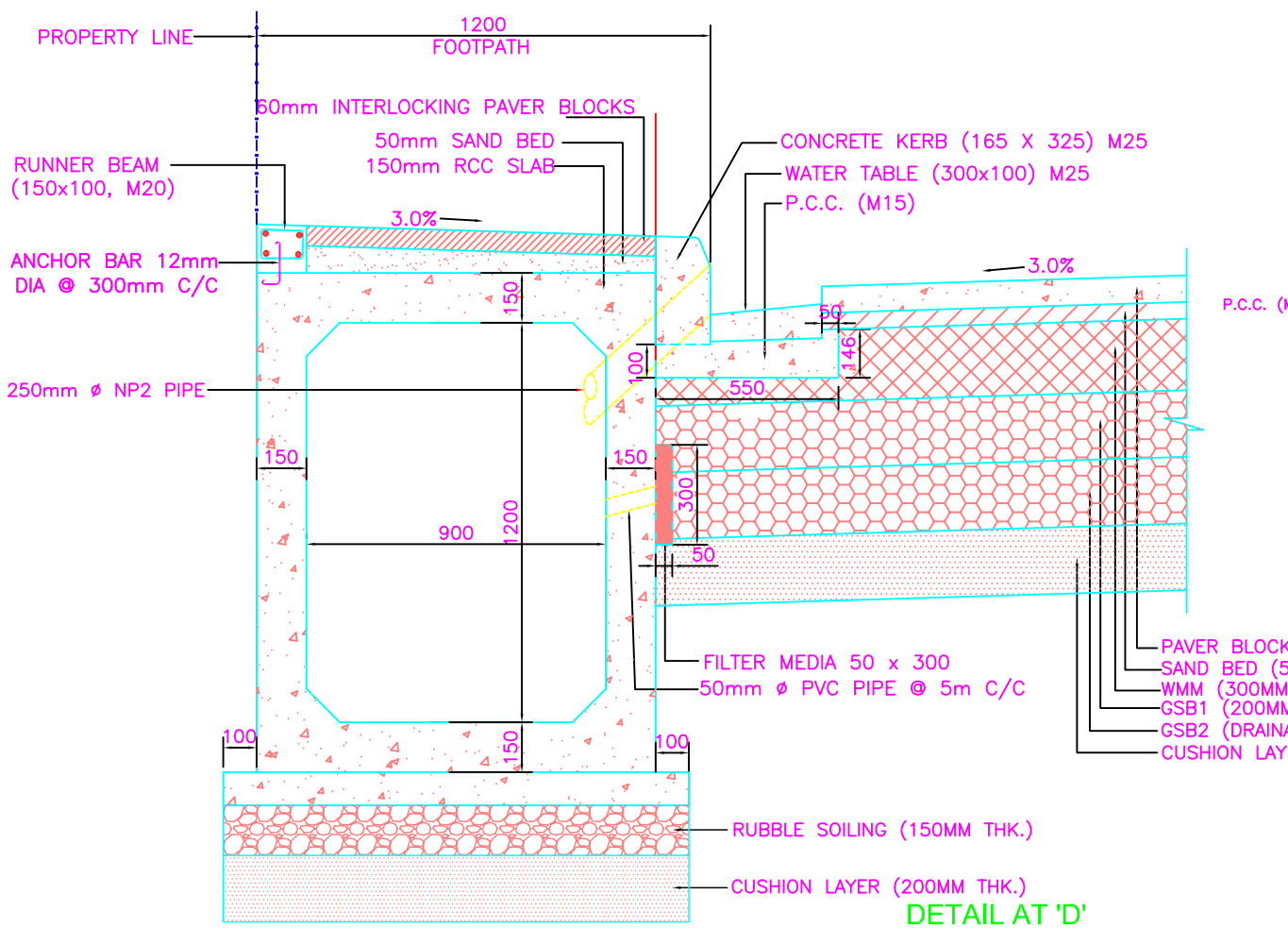

DETAIL AT 'D'
TYPICAL DETAIL OF FOOTPATH & DRAIN
(SCALE 1:15)

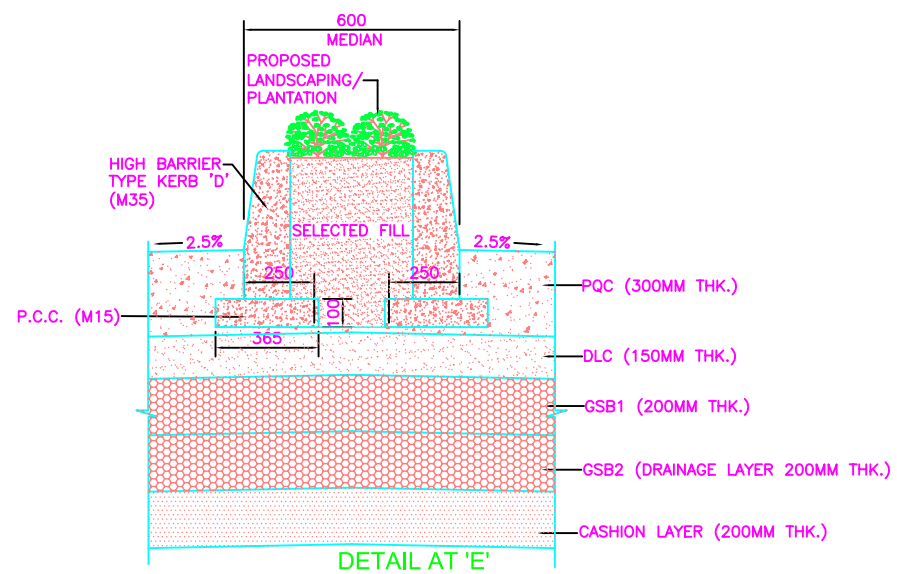

DETAIL AT 'E'
TYPICAL DETAIL OF MEDIAN
(SCALE 1:18.75)

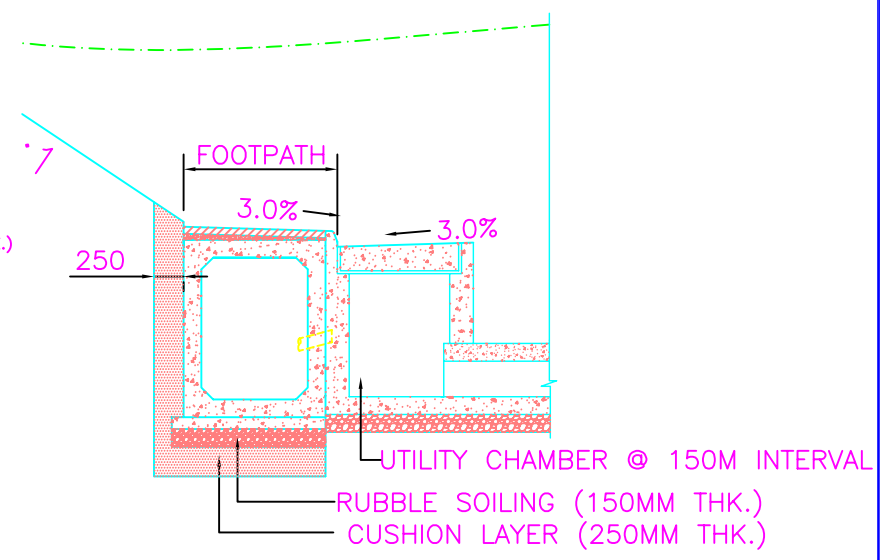

DETAIL AT 'F'
TYPICAL DETAIL OF DRAIN

FIGURE 3.6