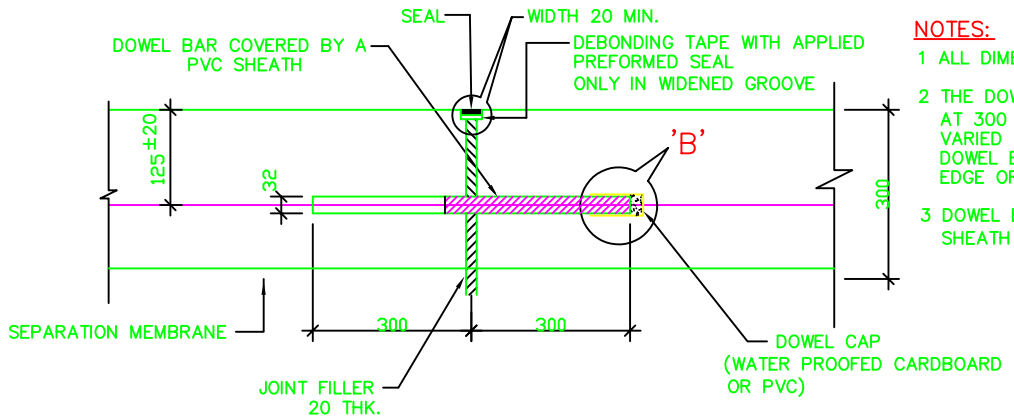

NOTES:

1 ALL DIMENSIONS ARE IN MILLIMETRES.

2 THE DOWEL BARS SHALL BE PLACED AT 300 CENTRES. THIS SPACING SHALL BE VARIED WHERE NECESSARY SO THAT NO DOWEL BAR IS WITHIN 150mm OF A SLAB EDGE OR A JOINT PARALLEL TO THE BARS.

3 DOWEL BARS TO BE COVERED BY THIN PLASTIC SHEATH FOR MIN. OF 1/2 LENGTH PLUS 50 mm.

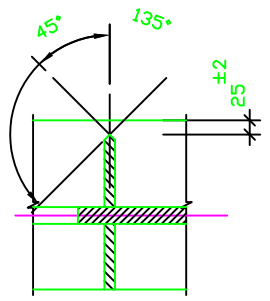

JOINT BEFORE SAWING

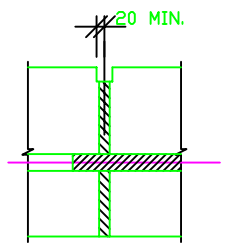

JOINT AFTER SAWING

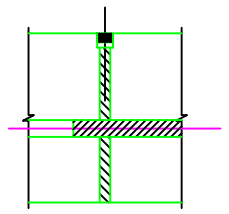

JOINT SEALED

SAWN GROOVE FILLER DETAIL

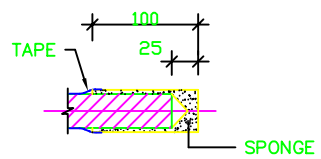

DETAIL–'B'

TRANSVERSE CONSTRUCTION JOINT

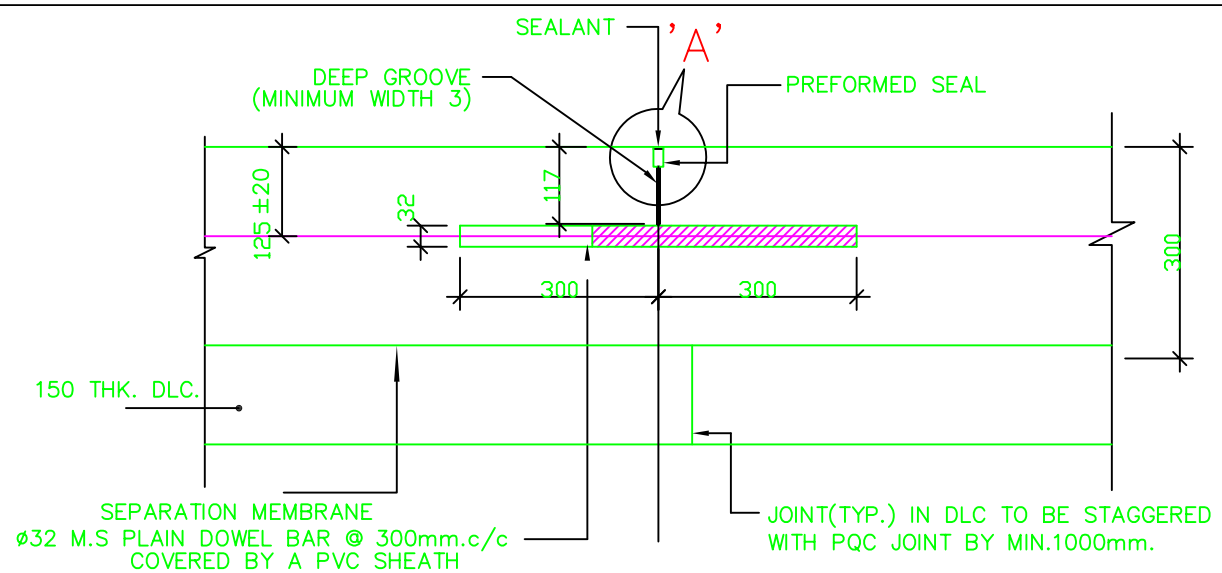

CONTRACTION JOINT WITH SAWN GROOVE

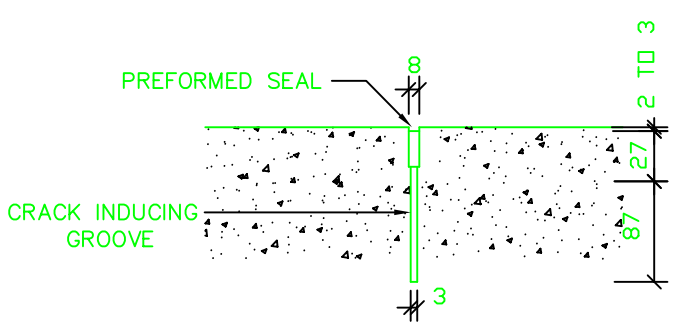

DETAIL 'A'

NOTES:

1 ALL DIMENSIONS ARE IN MILLIMETRES.

2 THE DOWEL BARS SHALL BE PLACED AT 300 mm CENTRES. THIS SPACING SHALL BE VARIED WHERE NECESSARY SO THAT NO DOWEL BAR IS WITHIN 150 MM OF A JOINT PARALLEL TO THE BARS.

3 CONTRACTION JOINTS SHALL BE PLACED AT 4500 mm CENTRES.

4 DOWEL BARS TO BE COVERED BY THIN PLASTIC SHEATH FOR MIN. OF 2/3 LENGTH FROM ONE END.

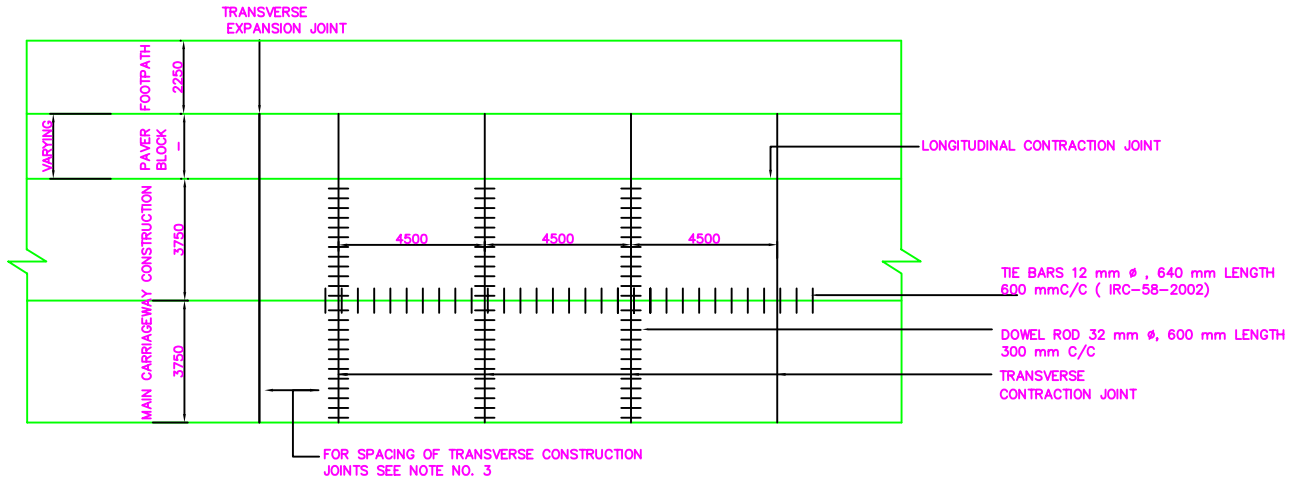

TRAFFIC DIRECTION

PAVEMENT JOINT PLAN
(7.5m CARRIAGEWAY)

NOTES:–

1 ALL DIMENSIONS ARE IN MILLIMETRES AND LEVELS ARE IN METRES, UNLESS OTHERWISE STATED.

2 DIMENSIONS SHALL NOT BE SCALED OFF FROM THE DRAWING.

3 THE TRANSVERSE CONSTRUCTION JOINTS WILL BE LOCATED AT THE STRUCTURES AS DIRECTED BY THE ENGINEER.
CONSTRUCTION JOINT SHALL BE PROVIDED AT 99M OR AT THE END OF DAYS WORK, WHICHEVER IS LESS. ALSO, IF THERE IS A STOPPAGE OF POURING FOR MORE THAN 30MIN. CONSTRUCTION JOINT SHALL BE PROVIDED.

4 CONCRETE GRADE FOR PAVEMENT SHALL BE M–35

5 PREFORMED ELASTOMERIC JOINT SEALS USING POLYSULPHIDE AS THE ONLY BASE POLYMER SHALL BE USED IN JOINTS.
THE MATERIAL AND THE MANUFACTURE SEAL SHALL CONFORM TO ASTM D 2628

6 LONGITUDINAL JOINT SHALL BE FORMED JOINT

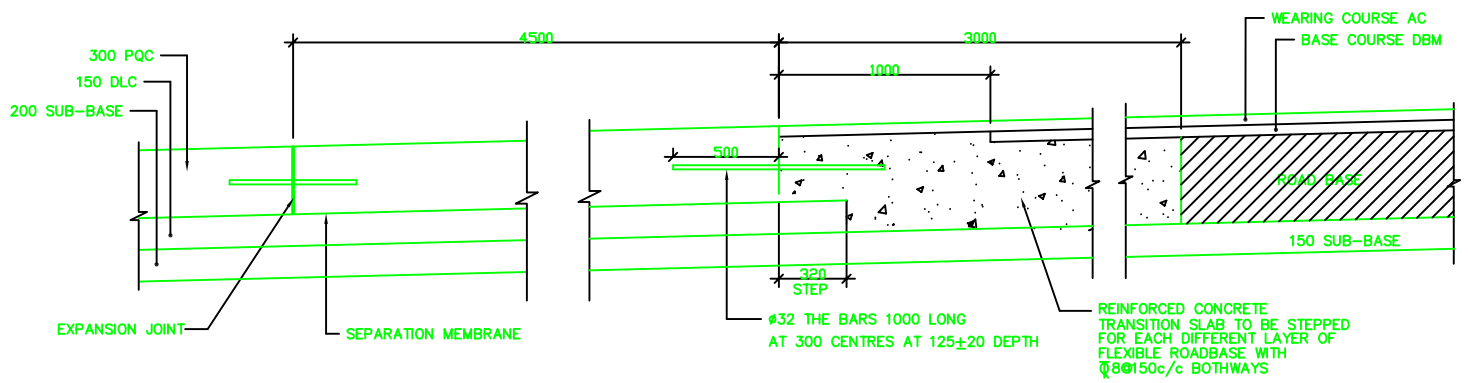

TRANSITION FROM RIGID TO FLEXIBLE CONSTRUCTION

REV.	DATE	DESCRIPTION OF REVISIONS	INITIALS

NOTICE:
THIS DRAWING HAS NOT BEEN PUBLISHED AND IS THE SOLE PROPERTY OF CONSULTING ENGINEERING SERVICES (I) PVT. LTD. AND IS ISSUED TO THE PARTY FOR THE SPECIFIC PURPOSE AS STATED IN THE AGREEMENT AND IT SHALL NOT BE REPRODUCED, COPIED, LENT OR OTHERWISE DISPOSED OF DIRECTLY OR INDIRECTLY, NOR USED FOR ANY OTHER PURPOSE OTHER THAN FOR WHICH IT IS FURNISHED.

CONSULTANT TO ITNL
CONSULTING ENGINEERING SERVICES (I) PVT. LTD
MUMBAI NEW DELHI KOLKATA

EMPLOYER
NANDED WAGHALA CITY MUNCIPAL CORPORATION

PROJECT
DPR FOR DEVELOPMENT OF NANDED CITY ROADS UNDER JNNURM

TYPICAL DETAILS OF CONCRETE PAVEMENT

SCALE: HORZ. - N.T.S. VERT. - N.T.S.

PURPOSE	DRAWING NO.	DATE	REVISION
FOR TENDER	2006069/RH/STD-003	24-06-2006	R0
STATUS	DRAWN	DESIGN	CHECKED	APPROVED
FOR APPROVAL	PRATIBHA	A.D.A.	G.H.REDDY	DR. C.S.S.